CHAPTER 1: INTRODUCTION

Electric vehicles (EVs) are rapidly emerging as sustainable alternatives to conventional internal combustion engine vehicles because of their high efficiency, low emissions, and reduced dependence on fossil fuels. The performance and reliability of electric vehicles largely depend on their energy storage systems, that is, battery packs. However, batteries are sensitive components whose safety, lifespan, and efficiency are directly influenced by operating conditions, such as voltage, current, temperature, and state of charge (SOC).

A **Battery Management System (BMS)** is employed to ensure optimal performance and longevity. The proposed project, **"Real-Time Battery Monitoring and Protection System for Electric Vehicle,"** focuses on designing and implementing a BMS prototype that continuously monitors crucial battery parameters and provides intelligent protection against abnormal conditions.

This system measures the individual cell voltages, pack current, and temperature in real time using appropriate sensors and a microcontroller (Arduino/ESP32). It calculates key indicators, such as the State of Charge (SOC) and State of Health (SOH), to estimate the remaining capacity and overall condition of the battery. The system also includes protection mechanisms to safeguard the battery against overvoltage, undervoltage, overcurrent, and overtemperature conditions.

Furthermore, the project incorporates data logging and wireless communication, enabling real-time monitoring via a dashboard or mobile application. The overall goal is to enhance the safety, efficiency, and reliability of electric vehicle battery systems by preventing failures and extending battery life through effective management and protection strategies.

In addition to improving battery safety and performance, the proposed system contributes to the overall efficiency and sustainability of electric vehicles. By providing accurate real-time data on battery health and performance, it helps users make informed decisions regarding charging cycles, maintenance, and energy usage. The modular design of the system allows it to be easily scaled for different battery capacities and configurations, making it suitable for a wide range of EVs, from small electric scooters to large electric cars. In the future, this project can be enhanced with advanced features such as machine learning-based fault prediction, CAN bus integration with vehicle control units, and cloud-based monitoring for fleet management.

CHAPTER 2: COMPONENTS AND TOOLS USED

Table 1: Components and Tools Used with Specifications and Price.

S.No	Component	Specification / Description
1	Arduino UNO	ATmega328P microcontroller, 5V logic, 14 digital I/O pins, 6
2	ACS712 Current Sensor	Hall effect-based current sensor, ±5A / ±20A / ±30A range
3	Voltage Sensor Module	Input: 0–25V DC, Output: 0–5V (uses 33kΩ & 10kΩ resistors)
4	DHT11 Sensor	Temperature and humidity sensor, operates at 3.5–5.5V
5	16×2 LCD Display with I²C Adapter	5V logic, I²C communication (SDA–A4, SCL–A5)
6	5V Relay Module (1-channel)	Opto-isolated relay, 10A rated contacts
7	NPN Transistor (2N2222)	Small signal NPN transistor for relay switching
8	Diode (1N4007)	Reverse voltage 1000V, forward current 1A
9	Resistors	1kΩ (base), 33kΩ & 10kΩ (voltage divider)
10	LM2596 Buck Converter	DC-DC step-down converter (Input: 7–35V → Output: 5V adjustable)
11	Lithium-ion Battery Pack	3 × 3.7V (2500
12	Fuse	5A or 10A inline/blade fuse for safety
13	Breadboard	830-point breadboard with male-female jumper wires

IMAGE	NAME
	Arduino
	ACS712 Current Sensor
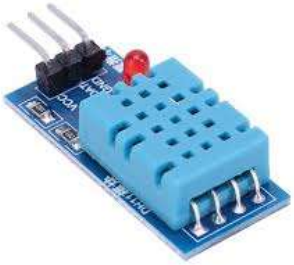	DHT11 Sensor

	Relay

	Jumper Wires
	Buck Converter (LM2596)
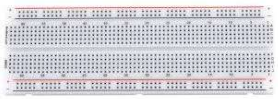	Bread Board
	Lithium-ion Battery Pack (3 × 2500
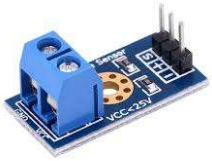	Voltage Sensor Module

CHAPTER 3: CIRCUIT DESIGN

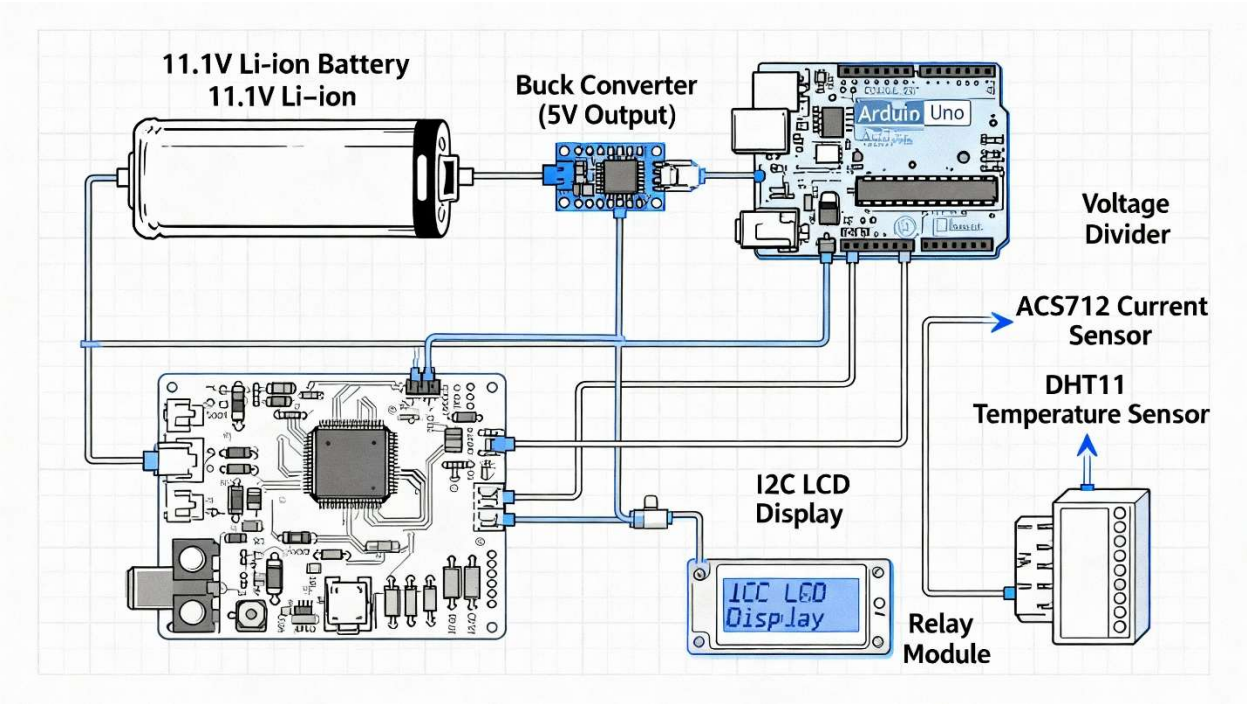

Fig : Battery Monitoring System

CHAPTER 4: CODE USED IN ARDUINO

```
#include <DHT.h>
// --- DHT11 setup ---
#define DHTPIN 2         // DHT11 data pin connected to D2
#define DHTTYPE DHT11
DHT dht(DHTPIN, DHTTYPE);

// --- Sensor pins ---
#define VOLT_PIN A1      // Voltage sensor output
#define CURR_PIN A0      // ACS712 output
#define RELAY_PIN 8      // Relay driver transistor base (through resistor)

// --- Constants for calibration ---
const float VREF = 5.0;       // Arduino reference voltage
const float R1 = 30000.0;     // Voltage divider top resistor (ohms)
const float R2 = 10000.0;     // Voltage divider bottom resistor (ohms)
const float V_SENS_RATIO = (R1 + R2) / R2;  // Scaling factor

// --- For ACS712 calibration ---
const float ACS_OFFSET = 2.5; // 0A = ~2.5V output
const float SENSITIVITY = 0.066; // For 30A module → 0.066 V/A (change if 5A or 20A module)

void setup() {
  Serial.begin(9600);
  dht.begin();
  pinMode(RELAY_PIN, OUTPUT);
  digitalWrite(RELAY_PIN, LOW); // Relay initially OFF
  delay(1000);
  Serial.println("🔋 IoT BMS Monitoring Started (No LCD Mode)");
  Serial.println("----------------------------------------");
}

void loop() {
  // --- Measure Voltage ---
  int rawV = analogRead(VOLT_PIN);
  float vOut = (rawV * VREF) / 1023.0;
  float batteryVoltage = vOut * V_SENS_RATIO;

  // --- Measure Current ---
  int rawI = analogRead(CURR_PIN);
  float vI = (rawI * VREF) / 1023.0;
  float current = (vI - ACS_OFFSET) / SENSITIVITY;

  // --- Measure Temperature & Humidity ---
  float humidity = dht.readHumidity();
  float temperature = dht.readTemperature();
```

```
  // --- Protection condition example ---
  bool fault = false;
  if (batteryVoltage > 12.6 || batteryVoltage < 9.0) fault = true;
  if (temperature > 50) fault = true;

  // --- Control relay ---
  if (fault) {
    digitalWrite(RELAY_PIN, LOW);  // Turn OFF motor
  } else {
    digitalWrite(RELAY_PIN, HIGH); // Turn ON motor
  }

  // --- Display in Serial Monitor ---
  Serial.print("Voltage: "); Serial.print(batteryVoltage); Serial.println(" V");
  Serial.print("Current: "); Serial.print(current); Serial.println(" A");
  Serial.print("Temp: "); Serial.print(temperature); Serial.println(" °C");
  Serial.print("Humidity: "); Serial.print(humidity); Serial.println(" %");
  Serial.print("Relay: "); Serial.println(fault ? "OFF (Protection Active)" : "ON");
  Serial.println("----------------------------------------");
  delay(2000);
}
```

CHAPTER 5: HARDWARE IMPLANTATION

- The system we are building is based on Arduino UNO, which acts as the main controller.
- The ACS712 current sensor measures the charging and discharging currents of the lithium-ion battery.
- The voltage sensor module monitors the real-time lithium-ion battery voltage.
- The DHT11 sensor was used to detect the temperature and humidity of the battery pack.
- The measured and calculated data of (voltage,current,temperature,humidity) is displayed on a 16×2 LCD with I^2C interface.
- A relay module is driven through a 2N2222 transistor, which disconnects the battery in case of low voltage for protection.
- The 1N4007 diode provides flyback protection for the relay coil safety.
- The LM2596 buck converter regulates the battery output voltage (11.1V) reduce to 5V to power the Arduino and sensors.
- All the components were connected to a breadboard for testing and demonstration.
- The system operates in real time,continuously monitoring and protecting the battery during operation.

The operation of this project can be explained in simple steps.

- The system starts when power is supplied from the Li-ion battery pack (13.2V).
- The LM2596 buck converter steps down the voltage to 5V for the Arduino and sensors.
- The voltage sensor measures the battery voltage in real time.
- The ACS712 current sensor measures the current flowing during charging or discharging.
- The DHT11 sensor detects the surrounding temperature and humidity.
- The Arduino UNO collected and processed data from all the sensors.
- The measured values (voltage,current,temperature, and humidity) are displayed on a 16×2 LCD via I^2C communication.
- If the battery voltage drops below a preset safe limit (e.g.,10V), the Arduino activates the relay to disconnect the battery and prevent over-discharge.
- When the voltage returns to normal,the relay automatically reconnects the battery.
- The system operates continuously,ensuring real-time monitoring and protection of the battery pack.

CHAPTER 7: RESULTS AND OBSERVATIONS

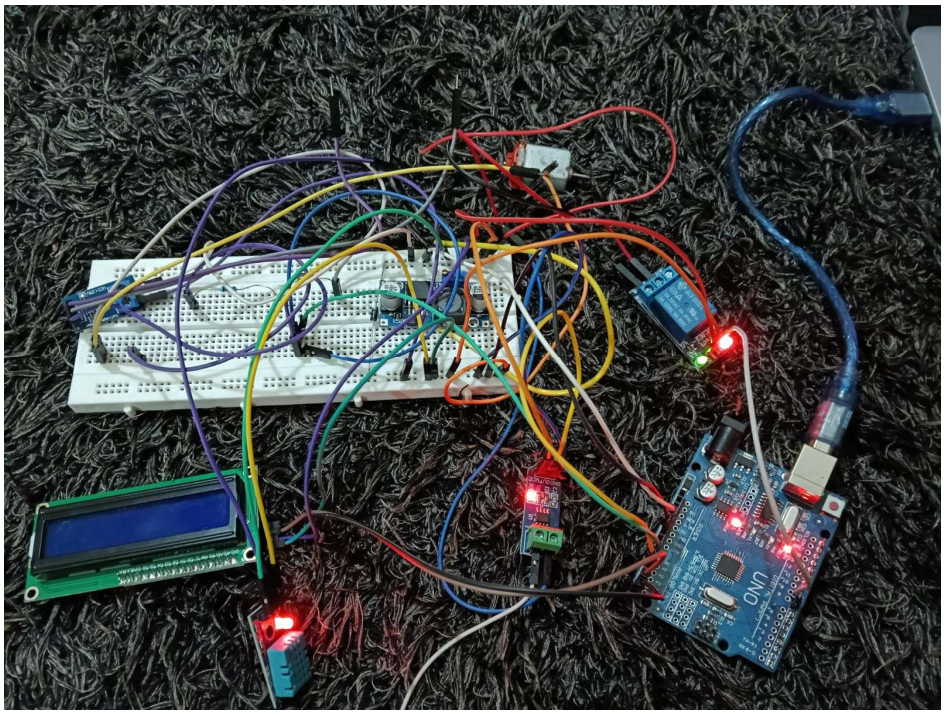

FIG: CONNECTION IMAGE

The project we have developed, ***Real-Time Battery Monitoring and Protection System for Electric Vehicle,*** successfully completed its intended objectives and results. The Arduino UNO was able to interface effectively with all the sensors, including the ACS712 current sensor, voltage sensor, and DHT11 temperature and humidity sensors. The voltage sensor accurately measured the real-time battery voltage within the safe operating range, whereas the ACS712 provided stable current readings during both charging and discharging conditions. The DHT11 sensor efficiently monitored the temperature and humidity of the battery environment. All measured parameters were displayed on a 16×2 LCD screen through the I²C interface, allowing easy real-time observation. The relay module responded precisely to the control signals from the Arduino, disconnecting the battery automatically when the voltage dropped below a certain level (approximately 10V) and reconnecting it once the voltage returned to normal. Overall, the system operated reliably and continuously, demonstrating real-time monitoring and automatic protection features, thus ensuring the safe operation of the battery used in the prototype electric-vehicle model.

CHAPTER 8: APPLICATIONS AND FUTURE SCOPES

Applications

- They are used in electric vehicles (EVs) to monitor battery voltage, current, and temperature in real time.
- It helps prevent battery overcharging and deep discharging, thereby extending the battery life.
- They are useful in solar power storage systems for monitoring battery performance and efficiency.
- They can be implemented in portable electronic devices that use lithium-ion batteries.
- It is applied in uninterruptible power supply (UPS) systems to ensure safe and efficient battery operation.
- This tool is helpful in battery research and testing laboratories for analyzing performance under various conditions.
- They are used in industrial and renewable energy systems to maintain stable battery operation and safety.
- It can be integrated with IoT-based systems for remote monitoring and data logging.

Future Scope

- IoT Integration:Connect the system to cloud platforms for remote battery monitoring using mobile applications or web dashboards.
- Data Analytics:Use stored (logged) data to analyze battery health, predict failures, and optimize charging cycles.
- Wireless Communication:Add Bluetooth, Wi-Fi, or GSM modules for real-time alerts and notifications.
- Automatic Load Control:The relay control was enhanced to automatically disconnect the load during unsafe voltage or temperature conditions.
- Advanced Battery Management System (BMS):It includes features such as cell balancing, State of Charge (SOC), and State of Health (SOH) estimation.
- Solar Charging Integration:It was combined with a solar panel setup for renewable energy-based battery charging.
- Machine Learning for Prediction:AI models should be implemented to predict battery lifespan and detect anomalies early.
- Compact PCB Design:Breadboard connections were replaced with a custom PCB for practical EV integration.

.

CHAPTER 9: REFERENCES

- Kim, T., Kim, J., & Cha, S. (2017). Real-Time Condition Monitoring for Lithium-Ion Batteries Based on Model-Based Parameter Estimation. IEEE Transactions on Instrumentation and Measurement, https://ieeexplore.ieee.org/document/8095896

- Jorkesh, S., Sadoughi, M., & Bahrami, A. (2024). Battery State-of-Charge and State-of-Health Estimation Using Hybrid Neural Networks. IEEE Access. https://ieeexplore.ieee.org/document/10766661

- Malik, G., Srivastava, N., & Chauhan, S. (2023). Real-Time Prognosis of State of Charge and State of Health on Cloud Platforms. IEEE Transactions on Industry Applications. https://ieeexplore.ieee.org/document/10474831

- Makuwatsine, T. T., et al. (2024). State of Charge (SOC) and State of Health (SOH) Estimation within a Battery Management System. IEEE Trans. Veh. Technol . https://ieeexplore.ieee.org/document/10827735 Analog Devices. (2016). LTC6804-1/LTC6804-2: Multicell Battery Monitors [Data sheet]. http://www.linear.com/LTC6804

- Texas Instruments. (2015). INA219: Zero-Drift, Bi-Directional Current/Power Monitor With I2C Interface. http://www.ti.com/product/INA219

- Analog Devices. (2025, May 13). A Closer Look at State of Charge (SOC) and State of Health (SOH) Algorithms. https://www.analog.com/en/technical-articles/a-closer-look-at-state-of-charge-and-state-of-health-algorithms.html

- Gozuoglu, A., et al. (2025). IoT-enhanced battery management system for real-time monitoring and predictive maintenance. Journal of Energy Storage, 55, 106783. https://doi.org/10.1016/j.est.2025.106783